| | |
|---|---|
| **Name:**<br>**Enrolment No:** | UPES<br>UNIVERSITY WITH A PURPOSE |

# UNIVERSITY OF PETROLEUM AND ENERGY STUDIES

## End Semester Examination, December 2021

**Programme Name: B.Tech. Mechatronics & ADE** **Semester : V**
**Course Name : Design of Machine Elements** **Time: 04 hrs**
**Max. Marks: 100**
**Course Code : MECH 3001**
**Nos. of page(s) : 3**

**Instructions:** ***Read the questions carefully and attempt as per section. Use of Design Data handbook is allowed. Assume suitable data if required/ missing.***

## SECTION A (30)

**Attempt all questions.**

| **S. No.** | **Statement of Problem** | **Marks** | **CO** |
|---|---|---|---|
| Q 1 | Design a longitudinal riveted joint for boiler shell the following data;<br>Diameter of boiler shell = (1800 + 100 xA)mm<br>Maximum internal pressure = 2.0 N/mm$^2$<br>Strength of plate in tension = 84 MPa<br>Crushing strength of plate = 130 MPa<br>Shearing strength of rivet = 70 MPa<br>Assume the relevant data from DDHB.<br>Select a suitable riveted joint to be designed. Suggest the diagram for designed joint.<br>A is last two digits of your roll no. | **20** | **CO3** |
| | **OR**<br>A rigid coupling transmits 35 kW at 180 rpm. The service factor for the application is 1.5 ( take design torque as 1.5 times the mean torque ). Select the suitable material for the various parts of the coupling. Take the material for shaft as 40C8 ( σ y= 380 MPa), material for bolts is 30C8 ( 400 MPa) and flanges are made up of cast iron FG 150 (σ ut =150 MPa). Take factor of safety as 2.5 for all components. Also draw neat sketch of the coupling. | **20** | |

## SECTION B (60)

**Attempt all questions. There is internal choice in Q. No. 4 &.**

| | | | |
|---|---|---|---|
| Q 2 | (i) Design a line shaft transmitting power to two machine tools. The power received by the shaft is (30+**A**) kW at 1000 rpm. The diameter of pulley $P_1$ is 300 mm and its mass is 40 kg. The diameter and mass of pulley $P_2$ is 600 mm and 100 kg respectively. Assume the belt tension ratio of 2.5 for both pulleys, design the shaft as per ASME code. | **20** | **CO2/CO4** |

| | | | |
|---|---|---|---|
| | 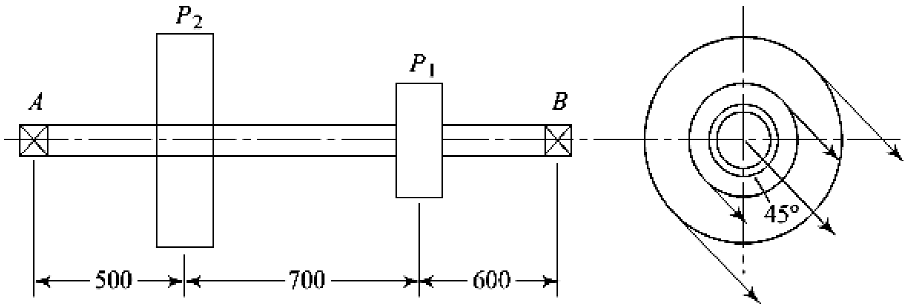 <br>All the dimensions are in mm.<br>(ii) A flat plate is subjected to a tensile force of 5 kN as shown in figure. The plate material is grey Cast Iron FG 250 and Factor of safety is 2.5. Determine the thickness of plate. Consider the dimensions in mm.<br>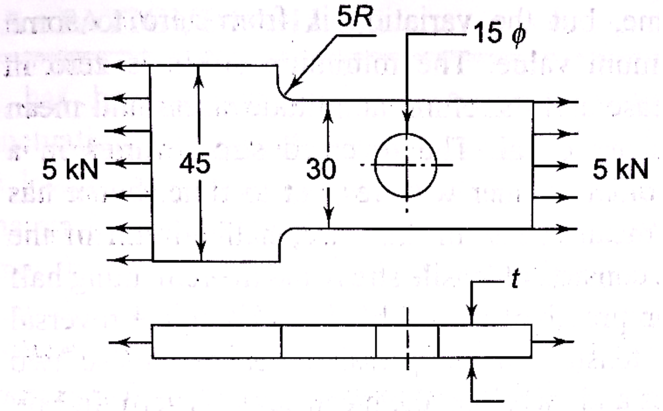 | **10** | **CO2** |
| Q 3 | Suggest the rolling contact bearing for the loading conditions;<br>Axial force = (8000+10 A) N<br>Radial force = (6000+10 A) N<br>Speed =1440 rpm<br>Desired Life = 5 years by assuming 8 hours working in a day<br>Assume the uniform and steady load .Suggest the shaft diameter.<br>**OR**<br>Suggest the bearing for journal diameter of 100 mm to be used for centrifugal pump application. Load applied to bearing is (20+A) kN and its speed is 1000 rpm. Complete the design calculation for bearing. Mention clearly the data assumed in solution; lubricating oil, bearing characteristic numbers etc.<br>***Use the following Viscosity diagram for selecting the lubricating oil for journal bearing design at operating temperature.*** | **20** | **CO2/CO4** |

<table>
<tr>
<td></td>
<td>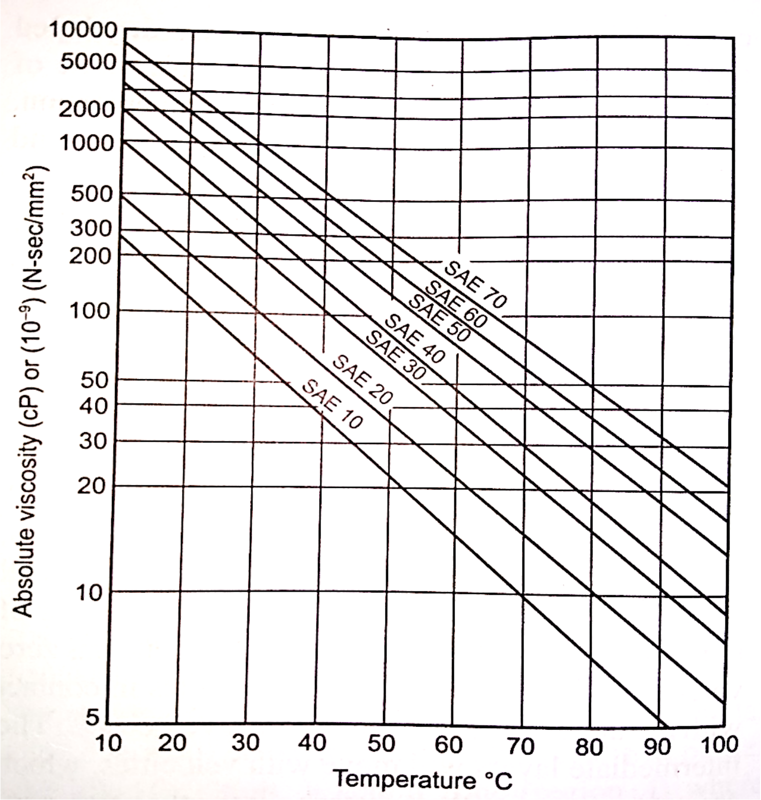 </td>
<td><b>20</b></td>
<td><b>CO2/CO4</b></td>
</tr>
<tr>
<td>Q 4</td>
<td>(i) Write the considerations to be made to select the materials to design the gears in detail & explain.<br>(ii) A compressor running at 500 rpm is driven by a (20+A) kW 1500 rpm motor through 20 $^0$full depth spur gears. Assume the centre distance in range of 200-300 mm. The pinion is to be made of C30 forged steel hardened and tempered. The gear is to be made of cast steel. Assuming <b>medium shock condition</b> design the gear completely for static and dynamic loading condition. Properties of materials of gear and pinion may be selected from the table as given below;
<table>
<tr><th>Material</th><th>Allowable static design stress</th><th>Endurance strength</th><th>BHN</th><th>Modulus of Elasticity</th></tr>
<tr><td>C30 forged steel hardened and tempered</td><td>224 MPa</td><td>300 MPa</td><td>250</td><td>210 GPa</td></tr>
</table></td>
<td><b>5+25</b></td>
<td><b>CO1/CO4</b></td>
</tr>
</table>